INSTRUCTION MANUAL

ASSEMBLY

OPERATION AND MAINTENANCE

OF

CONFINED ENTRY TC6

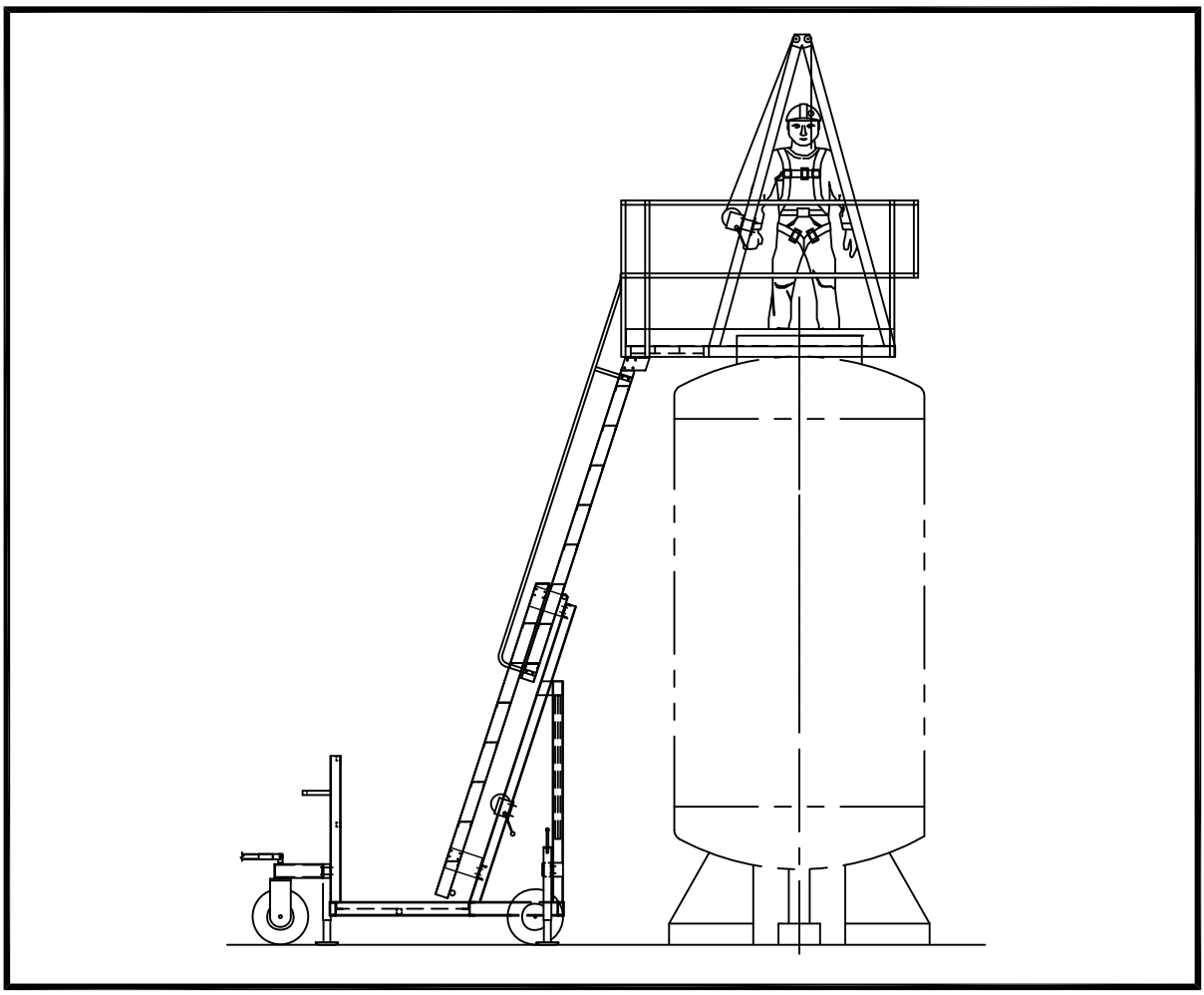

CARBIS
INCORPORATED

Proven Solutions in Safe Access and BEYOND

P.O. BOX 6229
FLORENCE, SC 29502-6229
800-845-2387
FAX: (843) 662-1536
WEB SITE: WWW.CARBIS.NET

TABLE OF CONTENTS

- INTRODUCTION & SAFETY
- PRODUCT DESCRIPTION
- ASSEMBLY
- OPERATION
- MAINTENANCE
- DRAWINGS & SPECIFICATIONS
- ADDENDA

INTRODUCTION & SAFETY

This product has been inspected and meets Carbis' Quality Control Standards. It is important that the information contained in this manual be reviewed before operating the unit, including the following:

- Inspect unit upon delivery for shipping damage or loose bolts. All fastening hardware that has been factory installed has been done so to remain tight; if any fastening hardware, whether factory or field installed, has been loosened, it is imperative that it be tightened before using the product.

- WARNING: This unit can conduct electricity. It is the responsibility of the customer to see that this unit is grounded before any operation is performed, and that all safety codes are followed as required.

- Appropriate Personnel Protective Equipment (PPE) such as gloves, safety glasses, safety shoes, etc., should be worn at all times during operation of this equipment.

- Before activating the unit always insure that all equipment and personnel are clear of moving components.

- Only qualified personnel in good physical condition, trained in the proper operation of this unit should be permitted to use it.

- Check that all warning/caution/notice safety placards/decals are clearly visible, legible, and in good repair.

- ATTENTION: AVOID PROBLEMS WITH STAINLESS STEEL BOLTS. Keep bolts and nuts free of grime and others contaminants that may get into threads. Lubricate stainless steel bolts and nuts prior to tightening. Avoid the use of impact speed wrenches. If one is used, a slower speed will allow heat to dissipate as the connection is tightened.

CONFINED ENTRY TC6 DESCRIPTION

SEE DRAWING CE-TC6 – 1

NOTE: The TC6 requires assembly before use; see the next page, *ASSEMBLY*, for instructions.

The Confined Entry TC6 consists of a galvanized steel base and an aluminum telescoping, ladder with handrails, and toeboard.

NOTE: Separate manuals for the DBI Sala rescue and retrieval equipment are available for download at www.salagroup.com for the model 8000000 tripod, 8300030 winch, and for the Type II Lanyards.

- The base incorporates an aluminum fixed ladder bolted to a frame support, a rear set of foam filled pneumatic tires, and dual foam filled pneumatic tires incorporated with a front tow bar/steering mechanism.
- Leveling jacks are mounted on the rear and front outrigger bars of the steel base.
- Steel counterweight bars are fixed to the front counterweight frame.
- The telescoping aluminum ladder and platform are bolted together to telescope as a unit.
- The base walk surface is slip resistant.
- The aluminum platform structure includes a partial walk area with a slip resistant walk surface; the remaining area is open for vehicle equipment access.
- A steel cable attached to the inside bottom of the telescoping ladder, and running over pulleys on the frame, is attached to a hand winch mounted on the frame support; the winch is the source of power for raising and lowering the telescoping ladder platform.

ASSEMBLY

1. Check that all following parts have been received.

   - Steel base with wheels, ladder brackets, steering/towbar mechanism and hand winch with cable 16'-0".
   - Four (4) screw jacks
   - Two (2) handrail spacers
   - One (1) extension ladder with handrails
   - One (1) aluminum platform
   - Two (2) 3/16" cable clamps
   - Two (2) 5/16" X 2-1/4" stainless steel bolts
   - Eight (8) 5/16" X 1" stainless steel bolts
   - Ten (10) 5/16" stainless steel nuts
   - Sixteen (16) 1/4" X1" stainless steel bolts
   - Sixteen (16) 1/4" stainless steel nuts
   - One (1) cable thimble

2. Assembly the aluminum platform to the top of the aluminum telescoping ladder using eight (8) 5/16" diameter X 1" bolts and stop nuts.

3. Assembly the aluminum handrails to the telescoping ladder platform using two (2) 5/16" diameter X 2-1/4" bolts and stop nuts.

4. Assembly the aluminum fixed ladder to the front of the steel base using sixteen (16) 1/4" X 1" diameter bolts and stop nuts.

5. Assembly screw jacks to the ends of each steel outrigger bar using 1/2" diameter fast pins.

6. Cable Assembly – Run the 3/16" diameter cable from the hand winch up over the 2 block pulleys on the steel base down between the steel base and the extension ladder. Loop the thimble through the hole in the bracket that is mounted on the inside of the bottom step of the telescoping ladder. Run the cable around the loop and fasten the loose end to the continuous part using two (2) 3/16" cable clamps. See drawing TC6MAN2

   NOTE: Separate manuals for the DBI Sala rescue and retrieval equipment are available for download at www.salagroup.com for the model 8000000 tripod, 8300030 winch, and for the Type II Lanyards.

OPERATION

- Visually inspect the unit before each use; never climb a damaged, bent, or broken ladder.
- NOTE: Do not let unit come in contact with live electrical wires; do not handle live electrical wires while standing on or in contact with the unit.
- Do not use this unit on slippery surfaces.
- Do not overload; ladder is designed for one person.
- This unit must rest on vehicle before accessing.
- NOTE: Separate manuals for the DBI Sala rescue and retrieval equipment are available for download at www.salagroup.com for the model 8000000 tripod, 8300030 winch, and for the Type II Lanyards.

1. Remove wheel chocks (if used) or raise the leveling jacks that were used to store the unit; make sure the wheels engage with the ground.
2. Move unit into approximate position at the vehicle.
3. Extend the ladder high enough to clear the highest point on the vehicle in the vicinity of the unit cage.
4. Move the unit closer to the vehicle so that the cage is in the approximated desired area.
5. Retract the ladder so that the protective bumpers on the lower part of the cage/platform rest on the vehicle. Make certain that the bumpers, or any parts of the cage, are not resting on any vehicle component subject to damage when a load is applied.
6. Lock the leveling jacks in the vertical position and extend them to disengage the wheels from the ground.
7. The ladder and platform w/cage will need to be lowered again to rest on the vehicle as noted in step 5.
8. Face the ladder when climbing up or down; maintain center of gravity, i.e., belt buckle, between ladder side rails.
9. Maintain a firm grip; use both hands while climbing.
10. Remove any tools or material from the ladder platform.
11. When finished with the unit, extend the ladder high enough to clear any point on the vehicle.
12. Retract the jacks to engage the wheels with the ground; store the jacks in the horizontal position.
13. Move the unit clear of the vehicle
14. Lower the ladder all the way down.
15. Store the unit; chock wheels, or extend at least two jacks (front or back) to disengage wheels form ground to keep unit immobile.
16. If the unit is to be towed, connect the tow bar to the towing vehicle; maximum tow speed is 5 MPH.

MAINTENANCE

1. Visually inspect the unit before each use. Replace any damaged parts. Monthly inspection of the unit is recommended as a minimum. Harsh atmosphere and/or heavy use may dictate more frequent inspections and lubrication.

2. All fastening hardware that has been factory installed has been done so to remain tight; if any fastening hardware, whether factory or field installed, has been loosened, it is imperative that it be tightened before using the equipment.

3. Check that all moving parts are functioning properly.

4. Keep unit clean and free from grease, oil, mud, snow, wet paint, and any other slippery material.

5. Never make repairs of damaged or missing parts; replace missing parts only with approved equal parts.

6. Lubricate the wheel bearings with a lithium-based grease. See addenda for lubrication of winch.

   For any assistance, replacement parts, comments, or questions, please call Carbis' Customer Service Department at 1-800-845-2387. Please have your model number and serial number available to expedite your request.

   NOTE: Separate manuals for the DBI Sala rescue and retrieval equipment are available for download at www.salagroup.com for the model 8000000 tripod, 8300030 winch, and for the Type II Lanyards.

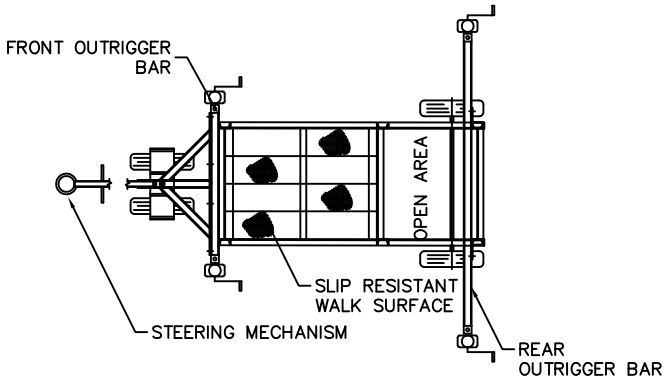

PLAN VIEW

LADDER AND LADDER FRAME NOT SHOWN

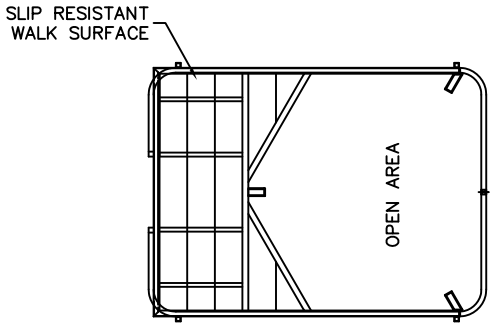

PLAN VIEW OF MODIFIED PLATFORM

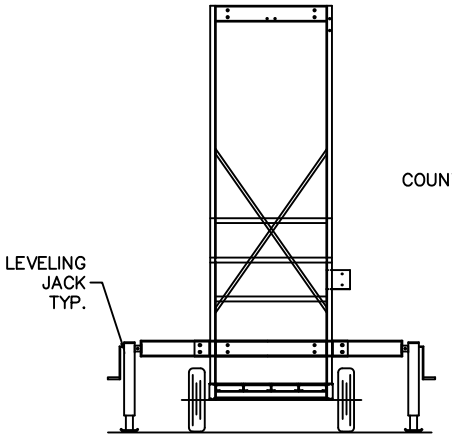

FRONT VIEW

LADDERS NOT SHOWN

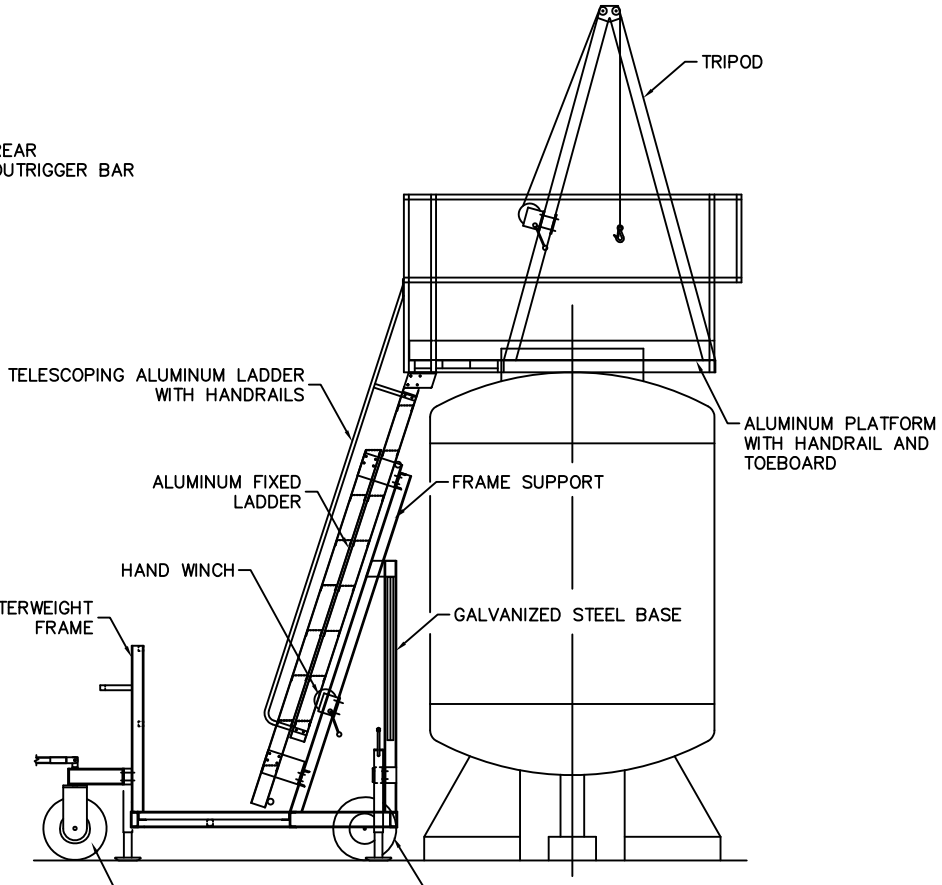

SIDE VIEW

SPECIFICATIONS			
MODEL	UNEXTENDED HEIGHT	EXTENDED HEIGHT	WEIGHT LBS.
TC6–14	10'–3¼"	14'–0"	1200
TC6–16	11'–3⅝"	16'–0"	1210

NOTE: WEIGHT DOES NOT INCLUDE TRIPOD

CAPACITY

300 LBS

WHEN SUPPORTED AT PLATFORM

THE CONFINED ENTRY TC6 MEETS OR EXCEEDS OSHA REGULATIONS AS WE INTERPRET THEM.

CUSTOMER

TITLE CONFINED ENTRY TC6 SPECIFICATIONS

CUSTOMER PURCHASE ORDER NUMBER

ALCO ORDER # | SCALE N.T.S. | SHEET 1 OF 1 | REV. 0

DRAWN BJL DATE 03/11/03 | CHECK DATE | FINAL CK. DATE | DRAWING NUMBER CE–TC6–1

PROPRIETARY DESIGN
THIS DRAWING IS THE PROPERTY OF AND CONTAINS CONFIDENTIAL AND PROPRIETARY DESIGN INFORMATION BELONGING TO CARBIS, INC. IT MUST BE RETURNED IMMEDIATELY UPON REQUEST AND MUST NOT BE COPIED IN WHOLE OR IN PART, NOR THE INFORMATION SHOWN THEREON DISCLOSED TO THIRD PARTIES OR OTHERWISE USED EXCEPT AS SPECIFICALLY PERMITTED BY CARBIS, INC.

REV | DWN | DATE | CHK | DATE | REVISION

CARBIS INCORPORATED
Bulk Loading Solutions
TEAM ALCO-LITE QUALITY COUNTS
P.O. BOX 6229
FLORENCE, SC 29502–6229
800–845–2387
FAX: (843) 662–1536
WEB SITE: WWW.CARBIS.NET

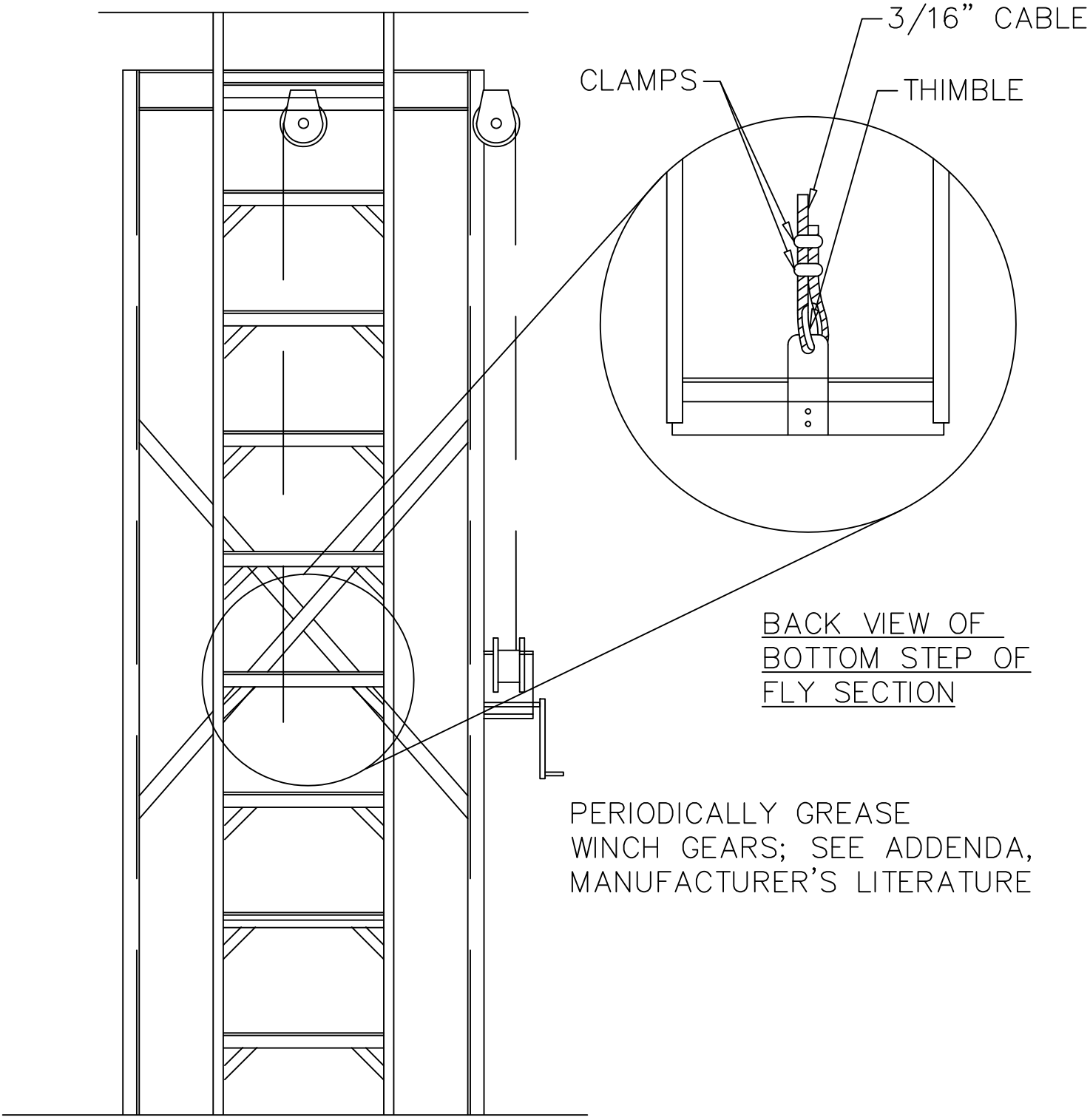

FRONT VIEW OF TC-6

H:\Detailers Stuff\Standard Mobile Unit Manuals\Confined Entry TC6\CE-TC6MAN2.dwg, May 19, 2010 - 9:22am

CUSTOMER			
SUBMITTED FOR: SPECIFICATIONS	CUSTOMER PURCHASE ORDER NUMBER	DATE: 05/07/99	
SHEET: 1 OF 1	REV.: 0	TITLE: TC6 ASSEMBLY	
		ALCO ORDER #	SCALE: N.T.S.
DRAWING NUMBER: TC6MAN2	DRAWN BY: JPD	CHECK / DATE	FINAL CK. / DATE

PROPRIETARY DESIGN
THIS DRAWING IS THE PROPERTY OF AND CONTAINS CONFIDENTIAL AND PROPRIETARY DESIGN INFORMATION BELONGING TO ALUMINUM LADDER COMPANY. IT MUST BE RETURNED IMMEDIATELY UPON REQUEST AND MUST NOT BE COPIED IN WHOLE OR IN PART, NOR THE INFORMATION SHOWN THEREON DISCLOSED TO THIRD PARTIES, OR OTHERWISE USED EXCEPT AS SPECIFICALLY PERMITTED BY ALUMINUM LADDER COMPANY.

REV	BY	REV INFO	DATE

TEAM ALCO-LITE QUALITY COUNTS

Aluminum Ladder Company
We Invented Aluminum Ladders
P.O. BOX 5329
FLORENCE, SC 29502
800-752-2526
FAX: (843) 679-3202
WEB SITE: WWW.ALUMINUMLADDER.NET

NOTE:
SOME PARTS MAY BE PREASSEMBLED.

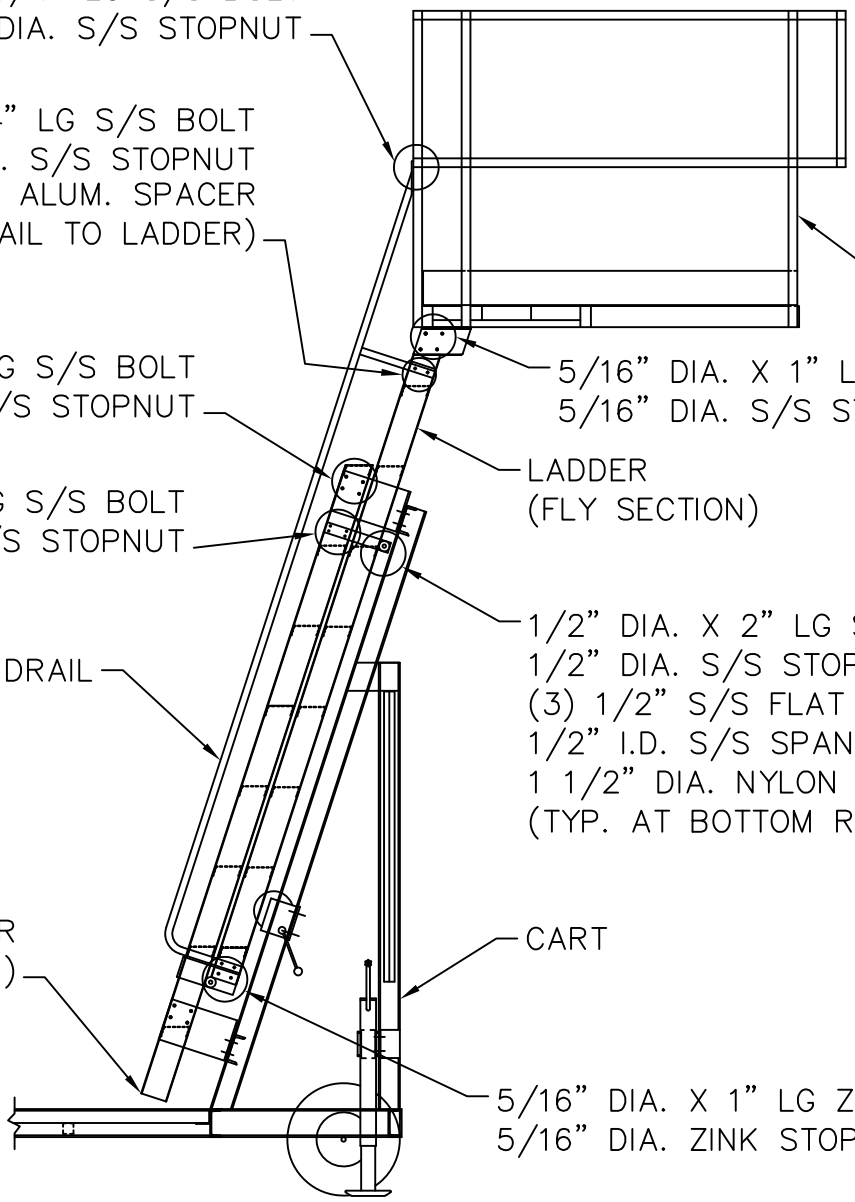

H:\Detailers Stuff\Standard Mobile Unit Manuals\Confined Entry TC6\LAD-ASSY.dwg, May 19, 2010 - 9:23am

CUSTOMER			
TITLE STANDARD TC6 ASSEMBLY			
CUSTOMER PURCHASE ORDER NUMBER			
ALCO ORDER #	SCALE N.T.S.	SHEET 1 OF 1	REV. 0
DRAWN N.T.S. DATE 03/27/00	CHECK DATE	FINAL CK. DATE	DRAWING NUMBER LAD-ASSY

PROPRIETARY DESIGN
THIS DRAWING IS THE PROPERTY OF AND CONTAINS CONFIDENTIAL AND PROPRIETARY DESIGN INFORMATION BELONGING TO CARBIS, INC. IT MUST BE RETURNED IMMEDIATELY UPON REQUEST AND MUST NOT BE COPIED IN WHOLE OR IN PART, NOR THE INFORMATION SHOWN THEREON DISCLOSED TO THIS THIRD PARTIES OR OTHERWISE USED EXCEPT AS SPECIFICALLY PERMITTED BY CARBIS, INC.

REV	DWN	DATE	CHK	DATE	REVISION

CARBIS INCORPORATED
Proven Solutions in Safe Access and BEYOND
TEAM ALCO-LITE QUALITY COUNTS
P.O. BOX 6229
FLORENCE, SC 29502-6229
800-845-2387
FAX: (843) 662-1536
WEB SITE: WWW.CARBIS.NET

BRAKE WINCHES

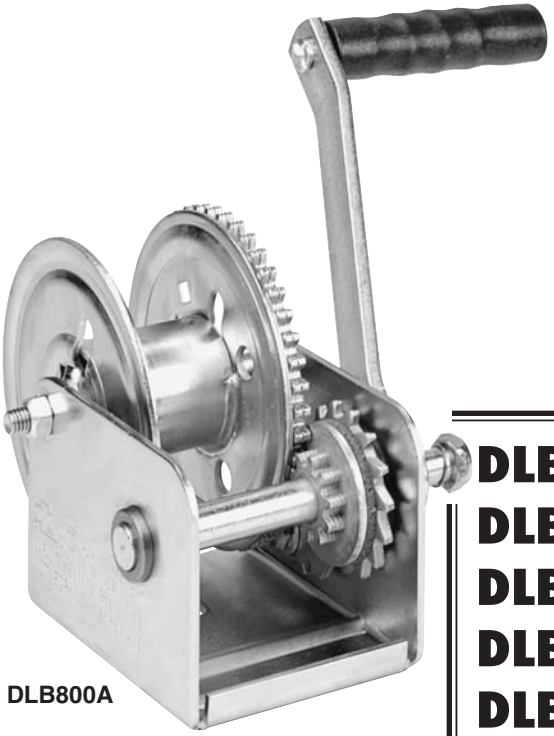

DLB800A

DLB350A
DLB350AG
DLB800A
DLB800AG
DLB1200A
DLB1200AG
DLB1500A
DLB1500AG
DLB2000AG
DLB2500A

MANUFACTURED BY **MADE IN U.S.A.**

DUTTON-LAINSON COMPANY *SINCE 1886*

451 West 2nd St. • Hastings, NE 68902-0729 • TEL: 402-462-4141 • FAX: 402-460-4612
Web Site www.dutton-lainson.com

ISO 9001: 2000 REGISTERED Q.M.S.

Dwg. No. 206306K 1/08

WARNING READ INSTRUCTIONS CAREFULLY BEFORE ATTEMPTING TO INSTALL, OPERATE OR SERVICE THIS WINCH. FAILURE TO COMPLY WITH INSTRUCTIONS COULD RESULT IN SERIOUS OR FATAL INJURY. RETAIN THESE INSTRUCTIONS FOR FUTURE REFERENCE.

IMPORTANT SAFETY INFORMATION

- This brake winch is built for multi-purpose hauling and lifting operations. It is not to be used as a hoist for lifting, supporting or transporting people, or for loads over areas where people could be present.
- Respect this winch. High forces are created when using a winch, creating potential safety hazards. It should be operated and maintained in accordance with instructions. Never allow children or anyone who is not familiar with the operation of the winch to use it. A winch accident could result in personal injury.
- Check winch for proper operation on each use. Do not use if damaged. Seek immediate repairs.
- Never exceed rated capacity. Excess load may cause premature failure and could result in serious personal injury. This winch is rated on first layer of cable on the hub. Using more layers of cable increases the load on the winch.
- Never apply load on winch with cable fully extended. Keep at least three full turns of cable on the reel.
- Secure load properly. When winching operation is complete, do not depend on winch to support load.
- Operate with hand power only. This winch should not be operated with a motor of any kind. If the winch cannot be cranked easily with one hand, it is probably over-loaded.
- If winch will be used in freezing, icy conditions, apply silicone spray to ratchet pawl and spacer items V, W, X or Y. Do not spray other brake mechanism parts.

ASSEMBLY – Thread the handle onto the winch drive shaft and be certain that a clicking noise is produced when the handle is turned clockwise. Install the spring and locknut (Items E and G) on the end of the drive shaft as shown on parts drawing. These parts may appear to serve no function, but they provide several important fail-safe features, and should not be altered or removed.

WINCH MOUNTING AND CABLE ATTACHMENT – For maximum strength and safety, this winch should be mounted with three 3/8" bolts (M10), washers and lock washers. (See parts drawing). Using fewer bolts or alternate locations will result in damage to the winch base and the winch may malfunction.

Attach cable or rope by either method shown in sketch.

OPERATING INSTRUCTIONS – Wind cable on winch reel by turning winch handle in clockwise direction. This should produce a loud, sharp, clicking noise. The load will remain in position when the handle is released. Wind cable off the winch reel by turning winch handle counterclockwise (no noise will be produced). The load will remain in position when the handle is released, but for extra security it is recommended that the handle be turned clockwise until at least two clicks are heard. This will add extra tightness to the brake mechanism. Always satisfy yourself that the winch is holding the load before releasing the winch handle.

IMPORTANT: Sufficient load must be applied to the cable to overcome internal resistance and operate the brake properly, otherwise turning the crank handle counterclockwise will only remove the handle from the shaft – the reel will not turn. The minimum operating load requirement is 50 lb (23 kg) for Models DLB350A, DLB350AG, DLB800A, DLB800AG, DLB1200A and DLB1200AG, 75 lb (34 kg) for DLB1500A and DLB1500AG, 175 lb (80 kg) for DLB2000AG and DLB2500A.

Models DLB805A, DLB1205A, & DLB1505A, are equipped with a lockout lever for the purpose of 'freewheeling' cable out when there is no load on the winch. To 'freewheel' cable out, simply turn the handle counterclockwise until lockout lever can be engaged behind handle hub. In this condition cable can be easily pulled from the winch drum.

WARNING: Never put winch in freewheel mode if any potential for a load on the cable exists. Engaging the lockout lever keeps the winch from stopping in the event that a load is accidentally applied.

WINCH MAINTENANCE – In order to insure maximum performance, a periodic inspection for any necessary preventive maintenance should be made. Check at least once annually and more frequently when the winch is exposed to an environment which is particularly dirty or wet. For continued smooth performance and increased life, occasionally grease gears, reel shaft and handle threads. An occasional drop of oil on the drive shaft bearings is also recommended. If winch will be used in freezing, icy conditions, apply silicone spray to ratchet pawl and spacer items V, W, X or Y. **Note: Do not oil or grease brake mechanism items H and J.**

Keep winch in good working order. Damaged or severely-worn parts create unnecessary dangers and could result in personal injury or property damage.

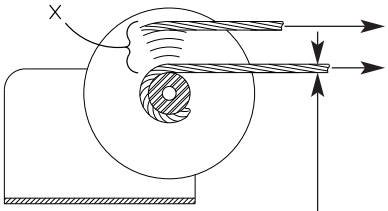

	X	
DLB350A, DLB350AG	10 1	110 lb/50kg 350 lb/160kg
DLB800A, DLB800AG	9 1	330 lb/150kg 800 lb/360kg
DLB1200A, DLB1200AG	8 1	551 lb/250kg 1200 lb/545kg
DLB1500A, DLB1500AG	6 1	728 lb/330kg 1500 lb/680kg
DLB2000AG	5 1	959 lb/435kg 2000 lb/905kg
DLB2500A	5 1	1308 lb/593kg 2500 lb/1134kg

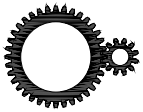

DLB350A DLB350AG	3.2:1
DLB800A DLB800AG	4.4:1
DLB1200A DLB1200AG	5.4:1
DLB1500A DLB1500AG	5.4:1
DLB2000AG DLB2500A	17.3:1

DLB350A	1/8″ (2000 lb) x 84′
DLB350AG	3mm (590kg) x 22.5m
DLB800A	3/16″ (4200 lb) x 68′
DLB800AG	4mm (1080kg) x 23.0m
DLB1200A	7/32″ (5600 lb) x 69′
DLB1200AG	5mm (1640kg) x 19.7m
DLB1500A	1/4″ (7000 lb) x 60′
DLB1500AG	6mm (2350kg) x 15.1m
DLB2000AG	7mm (3200kg) x 8.9m
DLB2500A	5/16″ (9800 lb) x 34′

ENGLISH – EC DECLARATION OF CONFORMITY – Dutton-Lainson Company, Hastings, NE 68902-0729 U.S.A. manufactures and declares that this winch is in conformity with the essential health and safety requirements specified in The Supply of Machinery (Safety) Regulations 1992 and the provisions of The Machinery Directive (89/392/EEC). This declaration does not apply to other machinery using this winch.

DANSK – EØF OVERENSSTEMMELSESERKLÆRING – Dutton-Lainson Company, Hastings, NE 68902-0729 USA, fremstiller og erklærer, at dette skraldespil er i overensstemmelse med de væsentlige sundheds- og sikkerhedsregler som er specificeret i The Supply of Machinery, Sikkerhedsregulativer af 1992, og Maskineldirektiv (89/392/EØF). Denne erklæring gælder ikke andet maskineri, der benytter skraldespillet.

SUOMI – EY:N VAATIMUSTENMUKAISUUSVAKUUTUS – Dutton-Lainson Company, osoite Hastings, NE 68902-0729, USA, vakuuttaa tämän vintturin valmistajana, että vintturi noudattaa vuoden 1992 koneidentoimitussäännösten (Supply of Machinery [Safety] Regulations) olennaisia työterveys- ja turvallisuusvaatimuksia sekä konedirektiivin (89/392/ETY) määräyksiä. Tämä vakuutus ei koske muita laitteita, joissa vintturia käytetään.

NEDERLANDS – EG VERKLARING VAN OVEREENSTEMMING – Dutton-Lainson Company, Hastings, NE 68902-0729 VS, fabrikant, verklaart dat deze lier voldoet aan de fundamentele gezondheids- en veiligheidseisen zoals vastgelegd in de Machinerichtlijn (89/392/EEG) en de nationale wetgeving ter uitvoering van deze richtlijn. Deze verklaring is niet van toepassing op andere machines die gebruik maken van deze lier.

FRANÇAIS – DÉCLARATION DE CONFORMITÉ CE – Dutton-Lainson Company, Hastings, NE 68902-0729 U.S.A. construit ce treuil et déclare qu'il est conforme aux exigences de sécurité et de sûreté essentielles spécifiées dans «The Supply of Machinery (Safety) Regulations 1992» (règlements de sécurité relatifs à la fourniture de machinerie) et dans «The Machinery Directive» (directive relative à la machinerie) (89/392/CEE). Cette déclaration ne s'applique pas aux autres machines utilisant ce treuil.

DEUTSCH – EU-KONFORMITÄTSERKLÄRUNG – Dutton-Lainson Company, Hastings, NE 68902-0729 USA, der Hersteller der Winde, erklärt, daß das Produkt mit den grundlegenden Gesundheits- und Sicherheitsanforderungen übereinstimmt, die in den Bestimmungen zum Inverkehrbringen von Maschinen (Sicherheit) 1992 und den Bestimmungen der Maschinenrichtlinie (89/392/EWG) spezifiziert sind. Diese Erklärung gilt nicht für andere Maschinen, die diese Winde verwenden.

ITALIANO – DICHIARAZIONE DI CONFORMITÀ ALLE DIRETTIVE DELLA COMUNITÀ EUROPEA – La Dutton-Lainson Company, con sede a Hastings, NE 68902-0729 USA, produce verricelli e dichiara che questo verricello è conforme ai requisiti essenziali di sicurezza e tutela della salute specificati nella normativa sulla sicurezza delle macchine emessa nel 1992 e nella Direttiva Macchine 89/392/CEE. Questa dichiarazione non è valida per altre macchine che utilizzino questo verricello.

NORSK – SAMSVARSERKLÆRING FOR EU – Dutton-Lainson Company, Hastings, NE 68902-0729, USA, fremstiller og erklærer at denne vinsjen er i samsvar med grunnleggende helse- og sikkerhetskrav spesifisert i for sikkerhetsforskriftene i det amerikanske regelverket for maskinlevering av 1992 [The Supply of Machinery (Safety) Regulations], samt bestemmelsene i det amerikanske maskindirektivet for EØS (89/392/EEC). Denne erklæringen gjelder ikke for andre maskiner som bruker denne vinsjen.

PORTUGUÊS – DECLARAÇÃO DE CONFORMIDADE COM A CE – A empresa Dutton-Lainson Company, Hastings, NE 68902-0729, nos E.U.A., fabrica este guincho e declara que este está em conformidade com os requisitos essenciais de saúde e segurança, tal como especificados nos Regulamentos (de Segurança) para o Fornecimento de Máquinas de 1992 e como previsto na Directiva relativa a Máquinas (89/392/CEE). Esta declaração não se aplica a outras máquinas que utilizem este guincho.

ESPAÑOL – DECLARACION DE HOMOLOGACION PARA CE – Dutton-Lainson Company, de Hastings, NE 68902-0729, EE.UU., fabrica y declara que este cabrestante satisface los requisitos esenciales de salubridad y seguridad especificados en el Reglamento (de Seguridad) para Suministro de Maquinarias de 1992 y en las disposiciones de la Directriz de Maquinarias (89/392/EEC). Esta declaración no incluye los demás equipos que utilicen este cabrestante.

SVENSKA – FÖRSÄKRAN OM ÖVERENSSTÄMMELSE – Dutton-Lainson Company, Hastings, Nebraska 68902-0729 U.S.A. tillverkar och försäkrar att denna vinsch överensstämmer med de väsentliga hälso- och säkerhetskrav som specificerats i Maskineriförordningar (säkerhet) 1992 och bestämmelserna i Maskineridirektiv (89/392/EEC). Denna försäkran gäller inte andra maskiner som använder denna vinsch.

ΕΛΛΗΝΙΚΑ – ΔΗΛΩΣΗ ΣΥΜΜΟΡΦΩΣΗΣ ΕΟΚ
Η Dutton-Lainson Company, Hastings, NE 68902-0729, U.S.A δηλώνει ότι κατασκευάζει το παρόν βαρούλκο σε συμμόρφωση με τις βασικές απαιτήσεις υγιεινής και ασφαλείας που προβλέπονται από τους Κανονισμούς Διάθεσης Μηχανημάτων (Ασφαλείας) 1992 και τις διατάξεις της Κοινοτικής Οδηγίας για Μηχανήματα (89/392/ΕΟΚ). Η δήλωση αυτή δεν ισχύει για άλλα μηχανήματα που χρησιμοποιούν το παρόν βαρούλκο.

Ron Haase

DLB350A & DLB350AG Winch

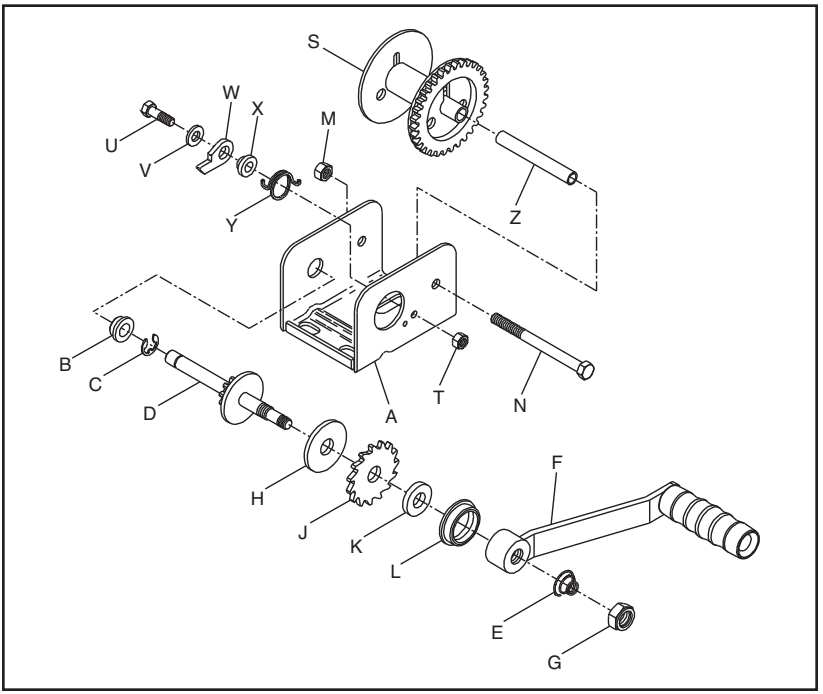

DLB800A & DLB800AG Winch

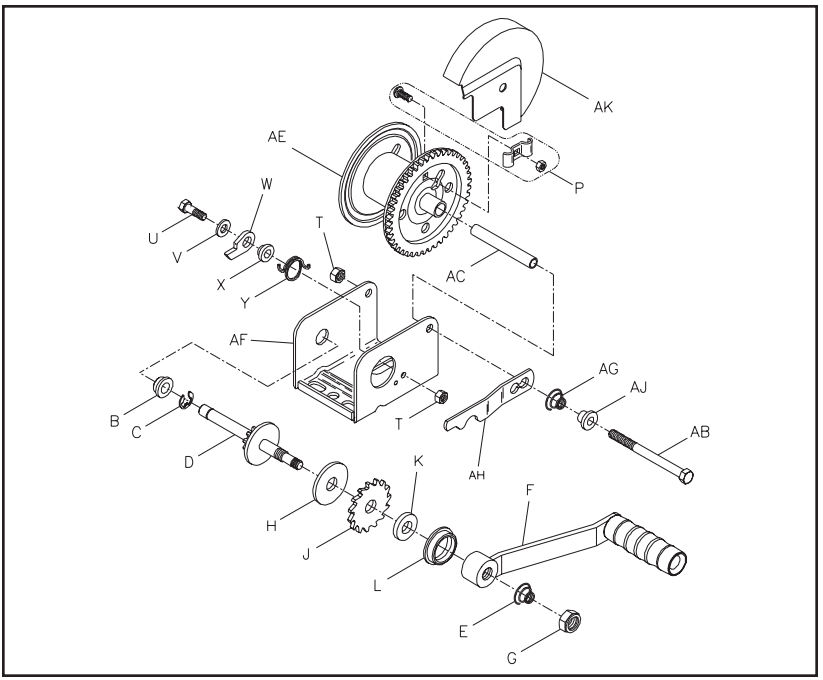

DLB1200A & DLB1200AG Winch

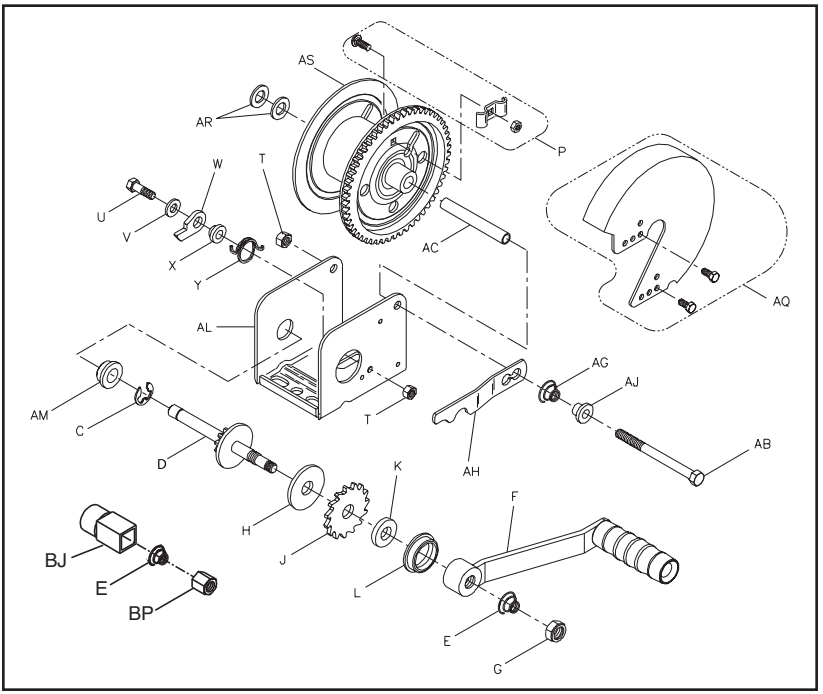

DLB1500A & DLB1500AG Winch

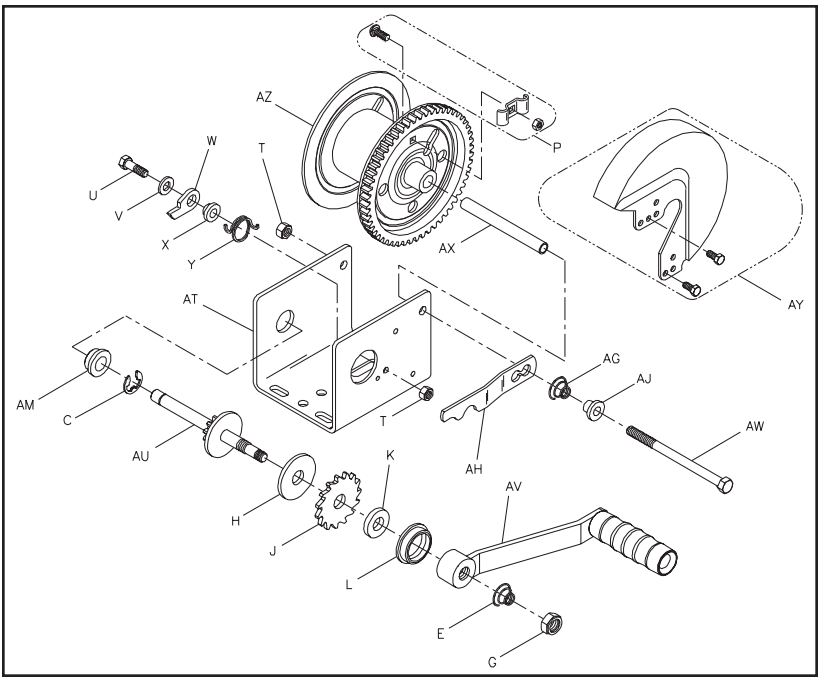

PARTS LIST

Ref	Description	Part No.
A	Base	404900*
A	Base – DLB 350AG	404945*
B	Bushing	204012
C	"E" Ring	205116
D	Drive Shaft	306061
E	Spring	204364
F	Handle – 7"	5703061
	Handle – 9-3/8"	5703103
G	Nut	205033
H	Pressure Plate	204362
J	Ratchet Wheel	404164
K	Pressure Washer	404163
L	Bushing	206328
M	Nut	205316
N	Bolt	205332
P	Rope Clamp Kit	304221
S	Reel	306075*
T	Locknut	204803
U	Bolt	205167
V	Flat Washer	205055
W	Pawl	404409
	Pawl – "G" Series	404190
X	Spacer	404166
	Spacer – "G" Series	404191
Y	Spring	204363
	Spring – "G" Series	204460
Z	Reel Spacer	207183
AB	Bolt	203161
AC	Reel Spacer	204807
AE	Reel	306062*
AF	Base	404893*
	Base – DLB 800AG	404895*
AG	Spring (optional)	204364

Ref	Description	Part No.
AH	Lockout Lever (optional)	404579
AJ	Spacer (optional)	404166
AK	Gear Cover (optional)	
	Painted Bronze	5240346
	Plated	5240361
AL	Base	404896*
	Base – DLB 1200AG	404897*
AM	Bushing	204009
AQ	Gear Cover (optional)	
	Painted Bronze	5240122
	Plated	5240221
AR	Spacer Washer	204360
AS	Reel	304754*
AS	Reel – 1-7/8" (optional)	304768*
AT	Base	404891*
	Base – DLB 1500AG	404892*
AU	Drive Shaft	304760
AV	Handle – 9-3/8"	5703103
	Handle – 12"	5703111
AX	Reel Spacer	204808
AY	Gear Cover (optional)	
	Painted Bronze	5240387
	Plated	5240403
AZ	Reel	304755*
BA	Base – DLB2500A	406047*
	Base – DLB 2000AG	404899*
BB	Spacer	404434
BC	Bolt	205006
BD	Flat Washer	205139
BE	Intermed. Drive Shaft	306035
BF	Nut	205014
BG	Bolt	204804
BH	Reel	304756*
BJ	Drive Hub (Optional)	304562
BL	Handle Brk. Assy (Opt)	304795
BM	Handle (Optional)	304638
BN	Handle Hub (Optional)	304630
BP	Slotted Nut (Optional)	404970
BQ	"E" Ring	206162
BR	Bushing	206163
BS	Bolt	205335

*Specify Color When Ordering

To order replacement parts contact:

Dutton-Lainson Company
www.dlco.com
Tel: 800-569-6577
Fax: 402-460-4612
e-mail: DLsales@dutton-lainson.com

In Europe Contact:
Aqua-Marine International Ltd.
8 Flanders Parks
Hedge End, Southampton
Hants, England SO30 2FZ
Tel: +44 (0) 1489-776050
Fax: +44 (0) 1489-776055
e-mail: sales@aqua-marineint.co.uk

DLB2000AG & DLB2500A Winch

BH
P
BF
BB
T
U
V
W
X
Y
AX
BS
BR
BQ
T
BC
BA
AM
C
BE
BD
B
AV
BL
AU
H
J
K
L
E
G
BN
E
BP
BM

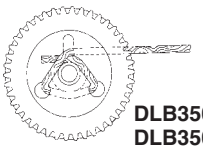

DLB350A
DLB350AG

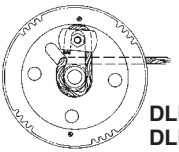

DLB800A
DLB800AG

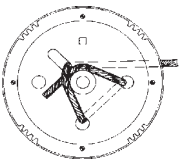

DLB350A
thru
DLB1500A

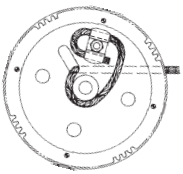

DLB1200A
DLB1200AG
DLB1500A
DLB1500AG

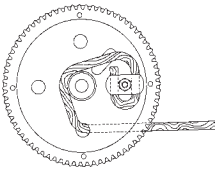

DLB2500A
DLB2000AG

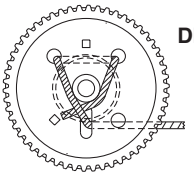

Alternate for DLB2000AG &
DLB2500A

Printed by:
CORNHUSKER PRESS SINCE 1935
Hastings, NE · Grand Island, NE · Kearney, NE

©2008

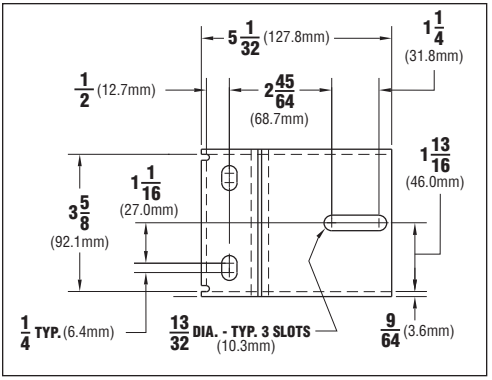

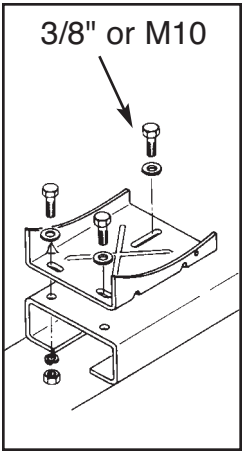

DLB350A, DLB350AG, DLB800A, DLB800AG, DLB1200A, DLB1200AG

DLB1500A
DLB1500AG

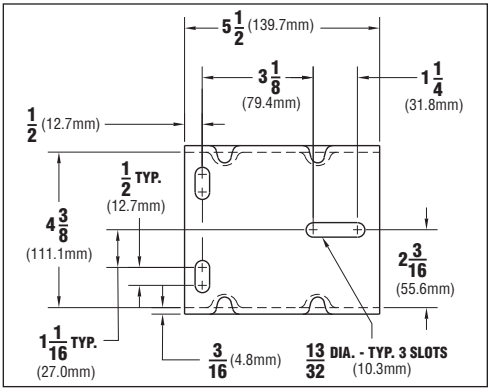

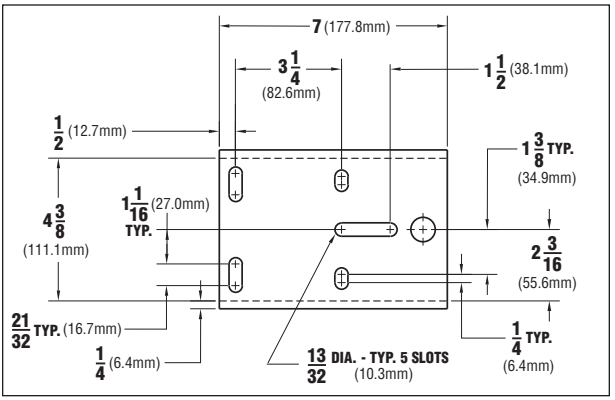

DLB2000AG
DLB2500A

WARNING **Component parts should not be interchanged with the component parts of any other Dutton-Lainson model or other manufacturer's winches.**

ADVARSEL: **Disse komponentdele må ikke blive udskiftet med komponentdele, der hører til andre modeller fra Dutton-Lainson Company eller til spil af andre fabrikater.**

VAROITUS: **Tämän mallin ja muiden Dutton-Lainson Companyn tai muiden valmistajien vintturien osia ei saa vaihtaa keskenään.**

WAARSCHUWING: **Deze onderdelen mogen niet verwisseld worden met de onderdelen van andere liermodellen van Dutton-Lainson Company of van lieren van andere fabrikanten.**

MISE EN GARDE: **Ces composants ne doivent pas être utilisés de manière interchangeable avec les composants d'aucun autre modèle de Dutton-Lainson Company ou avec les treuils d'un autre fabricant.**

ACHTUNG: **Die Komponenten dürfen nicht gegen andere Komponenten anderer Modelle der Dutton-Lainson Company oder der Winden anderer Hersteller ausgetauscht werden.**

ATTENZIONE: **Questi componenti non devono essere utilizzati in modo intercambiabile con i componenti di qualsiasi altro modello della Dutton-Lainson Company o con i verricelli di un altro fabbricante.**

ADVARSEL: **Disse komponentdelene skal ikke byttes om med komponentdeler for noen annen vinsj verken fra Dutton-Lainson Company eller noen annen produsent.**

PRECAUÇÃO: **Esses componentes não devem ser intercambiados com componentes de nenhum outro modelo da Dutton-Lainson Company nem de guinchos de outros fabricantes.**

ADVERTENCIA: **No se debe intercambiar estas piezas con las de algún otro modelo de cabrestante de la Dutton-Lainson Company o de otro fabricante.**

VARNING: **Byt inte ut komponentdelarna mot komponentdelar från andra vinschar tillverkade av Dutton-Lainson Company eller från andra tillverkares vinschar (eller tvärtom).**

ΠΡΟΕΙΔΟΠΟΙΗΣΗ Αυτά τα συνθετικά μέρη να μην αντικατασταθούν με συνθετικά μέρη άλλου μοντέλου της εταιρίας Δυττον-Λαινσον ή βαρούλκα άλλου εργοστασίου.

ENGLISH-To obtain a copy of the warranty in English, send a self-addressed envelope to: Dutton-Lainson Company; P.O. Box 729; Hastings NE 68902-0729; U.S.A.

DANSK-Man kan få garantibeviset på dansk ved at sende en svarkuvert til: Dutton-Lainson Company, P.O. Box 729, Hastings NE 68902-0729, USA.

SUOMI-Takuutodistuksesta saa suomenkielisen kopion lähettämällä riittävällä postimaksulla ja vastaanottajan osoitteella varustetun kirjekuoren osoitteeseen Dutton-Lainson Company, P.O. Box 729, Hastings NE 68902-0729, USA.

NEDERLANDS-Voor een exemplaar van de garantie in het Nederlands dient u een aan u zelf geadresseerde enveloppe te zenden naar: Dutton-Lainson Company; P.O. Box 729; Hastings NE 68902-0729; U.S.A.

FRANÇAIS-Pour obtenir une copie de la garantie en français, envoyer une enveloppe à votre nom et adresse à : Dutton-Lainson Company; P.O. Box 729; Hastings NE 68902-0729; U.S.A.

DEUTSCH-Wenn Sie eine deutsche Kopie der Garantibestimmungen erhalten möchten, senden Sie bitte einen adressierten Rückumschlag an: Dutton-Lainson Company; P.O.Box 729; Hastings NE 68902-0729; USA

ITALIANO-Per ricevere una copia della garanzia in italiano, inviare una busta riportante il proprio indirizzo a: Dutton-Lainson Company, P.O. Box 729, Hastings NE 68902-0729 USA.

NORSK-En kopi av denne garantien på norsk fås ved å sende en konvolutt med eget navn og adresse, til Dutton-Lainson Company, P.O. Box 729, Hastings NE 68902-0729, USA

PORTUGUÊS-Para obter uma cópia da garantia em português, envie um envelope com a sua morada para: Dutton-Lainson; P. O. Box 729; Hastings NE 68902-0729; E.U.A.

ESPAÑOL-Para obtener una copia de la garantía en español, envíe un sobre con su dirección impresa a: Dutton-Lainson Company, P.O. Box 729; Hastings NE 68902-0729 EE.UU.

SVENSKA-För att erhålla ett exemplar av garantin på svenska skicka ett adresserat kuvert till: Dutton-Lainson Company, P.O.Box 729, Hastings NE 68902-0729 U.S.A.

ΕΛΛΗΝΙΚΑ-Για να λάβετε ένα αντίγραφο της εγγύησης στα Ελληνικά, στείλτε ένα φάκελο εσωκλείοντας τα ταχυδρομικά τέλη αποστολής στην εξής διεύθυνση: Dutton-Lainson Company, P.O.Box 729, Hastings NE 68902-0729 U.S.A..